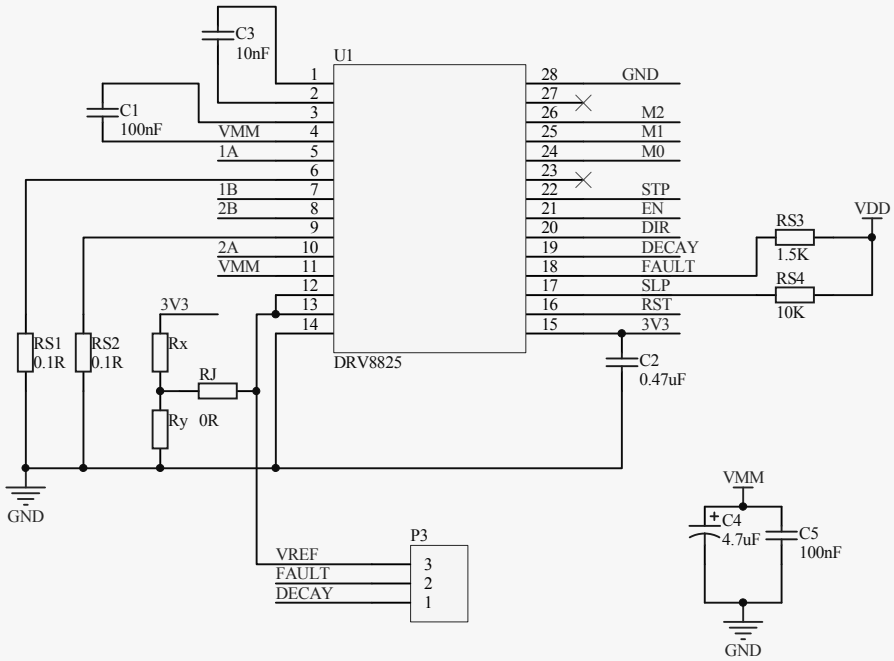

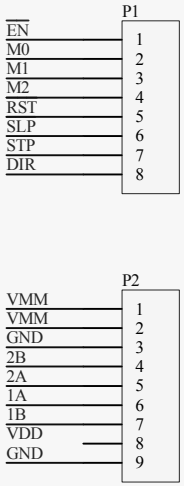

Title: *Stepper_Motor_Driver*		Revision:	*V1.1*
Drawn: Swanglei-SH		Size:	A4
Page: 1 of 1	Date: 2014/11/4	Time:	10:48:37